Park Board Meeting
Meeting Agenda
Meeting of April 21, 2016

6:00 PM Waterford Park
1702 Ravencroft Road

Park Board Members (3-year terms)

Member:	Nik Feist (Chair)	2016
Member:	Scott Festin (Vice Chair)	2017
Member:	J. D. Ludford	2018
Member:	Michael Werner	2018
Member:	David Puhl	2016
Alternate:	Andrew Stifter	2017
Council Liaison:	Kent Bloudek	

6:00 PM	Arbor Day Tree Planting	p. 1
6:20 PM	Call Meeting to Order	
6:21 PM	Hilk's Lake Park Playground Equipment	p. 2-16
6:31 PM	Review May Meeting Agenda Items	
6:35 PM	Adjourn	

Immediately following the meeting, members of the community are invited to join the Waconia Staff and Park Board Members in conducting a Spring Clean Up of the adopted Dakota Rail Trail segment.

ARBOR DAY CELEBRATION

Thursday
April 21, 2016
6:00 PM - 7:00 PM

Location:
Waterford Park
1702 Ravencroft Road, Waconia

Arbor Day is celebrated each spring and the City of Waconia will recognize this special day by planting trees at Waterford Park. All Waconia community members are invited to participate.

This celebration provides an opportunity to teach our community, its leaders and youth about the value of trees and fulfills Waconia's requirement as a member of Tree City USA.

At the conclusion of our celebration, the community is invited to join the Waconia Parks & Recreation staff & Park Board Members in conducting a spring cleaning of the department's Adopt-A-Trail section of the Dakota Rail Regional Trail. All equipment and supplies are provided for volunteers.

WACONIA

PUBLIC SERVICES DEPARTMENT MEMO

To: Park Board Members
From: Craig Eldred & David Wabbe
Date: April 21, 2016
RE: Hilks Lake Park Play Equipment Replacement Project
CC: Susan Arntz, City Administrator

In efforts to keep the Hilks Lake Park Play Equipment Replacement Project on schedule David and I met to discuss the revised design concepts which were desired by comments from the local residents of the Park.
Board may recall Flagship, Landscape Structures was the top choice with Option 2 being the ultimate consideration. Items desired by the residents were a Zip-Line or Monkey Bar component. Crosswind Swings, or a two-rider swing as a possibility. It was staff's intention to change the swing system from 2 units to 4 units.

David was supplied two options for the addition of a "Track Ride" system including an Attached or Freestanding concept. Breakout costs and overviews are attached with this memo.
After some discussion and consideration of the value and the space available it is the recommendation of staff to purchase the Freestanding design concept. The concept also allows multiple use of the site by different age groups.

Within the table below is a break out of costs for the entire project. Park Board Members may recall a request by the residents to research a shade structure and trail improvements. These improvements have been added to the table below for your consideration.

Hilks Lake Play Equipment Replacement Project

Budget Allocation		**$85,000.00**
Hilks Lake Improvement Item	**Quoted Pricing as Deduct**	
Flagship Equipment	-$42,020.00	$42,980.00
Project Park Improvements	-$10,067.50	$32,912.50

Sunshade Poligon Installed	-$10,371.25	$22,541.25
Trail Improvements	-$13,000.00	$9,541.25
Misc Amenity & Restoration	-$5,000.00	$4,541.25
Contingency		$4,541.25

The Miscellaneous Amenity items include Picnic Table, Garbage Receptacle. Restoration supplies include top soil, seed and storm water management control.

If the Park Board approves this item it will be forwarded to the City Council for approval of purchase on April 25th, or May 2nd.

Please find the following attachments:

1. Track Ride Attached Design & Cost
2. Track Ride Freestanding Design & Cost
3. Sunshade Design & Cost

poligon® FABRIC

A Division of PORTERCORP 4240 N. 136th AVE HOLLAND, MI 49424 (616) 399-1963
Designs and calculations of Poligon buildings are protected under copyright laws and patents and may not be used in the construction or design of a building that is not supplied by Poligon.
Copyright laws protect the style and visual appearance of the structure while patents may protect other parts of the design.
PATENTED AND/OR PATENTS PENDING COPYRIGHT 2013 PORTERCORP HOLLAND, MI 49424

PROJECT NAME:

PROJECT LOCATION:

BUILDING TYPE:

FABRIC TYPE: SHADE

JOB NUMBER:

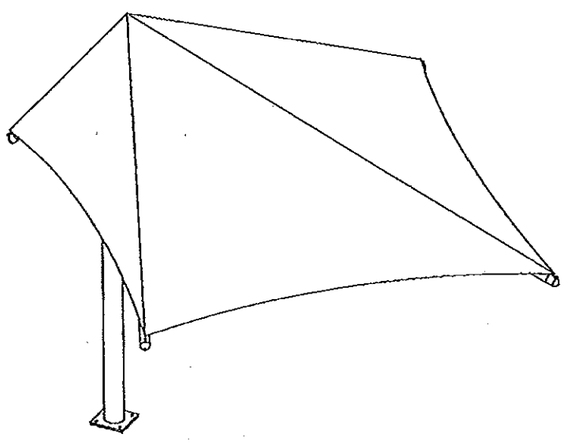

DRAWING LIST:

SHEET NUMBER	DRAWING DESCRIPTION
CS	COVER SHEET
1	ARCHITECTURAL ELEVATIONS
2-2.1	ANCHOR AND FOOTING LAYOUT / DETAILS
3	STRUCTURAL FRAMING PLAN
4-4.1	FRAME CONNECTION DETAILS
5	FABRIC LAYOUT
6	FABRIC DETAILS

MANUFACTURER NOTES:

MATERIALS:

DESCRIPTION	ASTM DESIGNATION
TUBE STEEL	A500 (GRADE B)
SCHEDULE PIPE	A53 (GRADE B)
RMT PIPE	A519
LIGHT GAGE COLD FORMED	A1003 (GRADE 50)
STRUCTURAL STEEL PLATE	A36
ROOF PANELS (STEEL)	A653
ANCHOR BOLTS	SEE SHEET 2.1

GENERAL NOTES:
UNLESS NOTED OTHERWISE, THIS STRUCTURE WAS DESIGNED TO ONLY SUPPORT WHAT IS SHOWN ON THESE DRAWINGS. POLIGON MUST BE CONTACTED IF ANYTHING ELSE IS TO BE ATTACHED TO THIS STRUCTURE (WALLS, COLUMN WRAPS, RAILINGS, ETC.) SO THE DESIGN OF THIS STRUCTURE CAN BE REVIEWED AND POSSIBLY REVISED.

UNLESS NOTED OTHERWISE, THIS STRUCTURE WAS DESIGNED ASSUMING A 20' SEPARATION BETWEEN ANY ADJACENT STRUCTURE WITH AN EAVE HEIGHT EQUAL TO OR GREATER THAN THE EAVE HEIGHT OF THIS STRUCTURE. IF THAT SEPARATION DOES NOT EXIST, POLIGON MUST BE CONTACTED SO THE DESIGN OF THIS STRUCTURE CAN BE REVIEWED AND POSSIBLY REVISED.

STRUCTURAL STEEL SHALL BE DETAILED, FABRICATED, AND ERECTED IN ACCORDANCE WITH THE LATEST EDITION OF THE AMERICAN INSTITUTE OF STEEL CONSTRUCTION (AISC) SPECIFICATION MANUAL.

ALL WELDING IS PERFORMED BY AMERICAN WELDING SOCIETY CERTIFIED WELDERS AND CONFORMS TO THE LATEST EDITION OF AWS D1.1 OR D1.3 AS REQUIRED.

PARTS SHOWN MAY BE UPGRADED DUE TO STANDARDIZED FABRICATION. REFER TO THE SHIPPING BILL OF MATERIALS AND FINAL INSTALLATION INSTRUCTIONS INCLUDED WITH THE STRUCTURE FOR POSSIBLE SUBSTITUTIONS AND IMPROVEMENTS.

FOR PROPER FIELD INSTALLATION OF THE BUILDING IT IS RECOMMENDED THAT THE PRIMARY FRAME INSTALLER AND THE ROOF INSTALLER HAVE A MINIMUM FIVE (5) YEARS DOCUMENTED EXPERIENCE INSTALLING THIS TYPE OF PRODUCT.

FOR PROPER FIELD INSTALLATION OF THE BUILDING IT IS RECOMMENDED THAT ELECTRIC WIRING, IF REQUIRED, BE RUN THROUGH THE STRUCTURAL MEMBERS BEFORE THE BUILDING IS ERECTED.

FABRICATOR APPROVALS:
CITY OF PHOENIX, AZ APPROVED FABRICATOR #C08-2010
CITY OF LOS ANGELES, CA APPROVED FABRICATOR #1596
CITY OF RIVERSIDE, CA APPROVED FABRICATOR #SP06-0033
CITY OF HOUSTON, TX APPROVED FABRICATOR #470
CLARK COUNTY, NV APPROVED FABRICATOR #264
STATE OF UTAH APPROVED FABRICATOR 02008-14

CERTIFICATES:
MIAMI-DADE COUNTY CERTIFICATE OF COMPETENCY NO. 12-0905.07
PCI (POWDER COATING INSTITUTE) 4000 CERTIFIED

DESIGN CRITERIA:

GENERAL:
2010 NEW YORK STATE BUILDING CODE
OCCUPANCY CATEGORY: II

DEAD LOAD:
FABRIC DEAD LOAD: 2 PSF
FRAME DEAD LOAD: SELF WEIGHT

LIVE LOAD:
ROOF LIVE LOAD: 0 PSF

SNOW DESIGN DATA:
GROUND SNOW LOAD (Pg): 30 PSF
FLAT ROOF SNOW LOAD (Pf): 25.2 PSF
SNOW EXPOSURE FACTOR (Ce): 1.0
SNOW LOAD IMPORTANCE FACTOR (Is): 1.0
THERMAL FACTOR (Ct): 1.2

WIND DESIGN DATA:
BASIC WIND SPEED (V): 100 MPH
GUST EFFECT FACTOR (G): 0.898
WIND IMPORTANCE FACTOR (Iw): 1.00
INTERNAL PRESSURE COEFFICIENT (GCpi): 0
WIND EXPOSURE: C

SEISMIC DESIGN DATA:
CANTILEVERED COLUMN SYSTEMS DETAILED TO INTERMEDIATE MOMENT FRAMES
SEISMIC IMPORTANCE FACTOR (Ie): 1.0
SEISMIC DESIGN CATEGORY: B
SEISMIC SITE CLASS: D

FABRIC DESIGN CONSIDERATIONS:
FABRIC SNOW LOAD (Pg): 0 psf
FABRIC BASIC WIND SPEED (V): 90 MPH

WARNINGS:
FABRIC TOP MUST BE REMOVED BEFORE ANY SNOW ACCUMULATION.
FABRIC TOP MUST BE REMOVED IN EVENT OF WINDS EXCEEDING 90 MPH.

IF THESE DRAWINGS ARE SEALED, THE SEAL APPLIES ONLY TO BUILDING COMPONENTS (AND FOUNDATION DESIGN IF APPLICABLE) DETAILED WITHIN THESE DRAWINGS.

poligon® (616)399-1963 www.poligon.com by PORTERCORP
COPYRIGHT 2013
PATENTED OR PATENTS PENDING
PORTERCORP 4240 N. 136th AVE HOLLAND, MI 49424

PRINT DATE:
SCALE:
DRAWN BY:
REV LEVEL:
CREATION DATE:
JOB NO:
CAD MODEL:
PROJECT:
PROJECT LOCATION:
DRAWING: COVER SHEET
SHEET CS

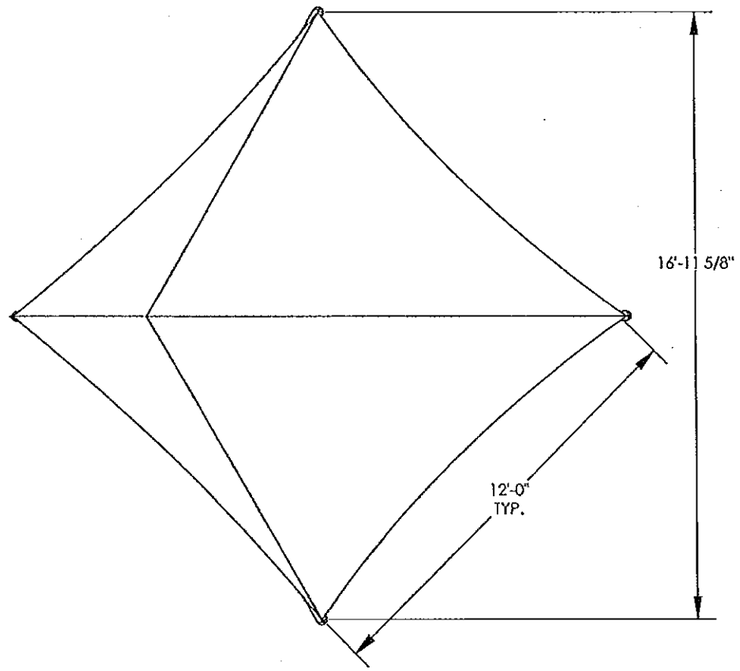

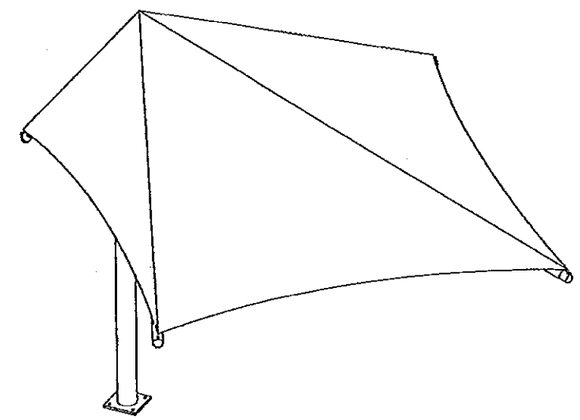

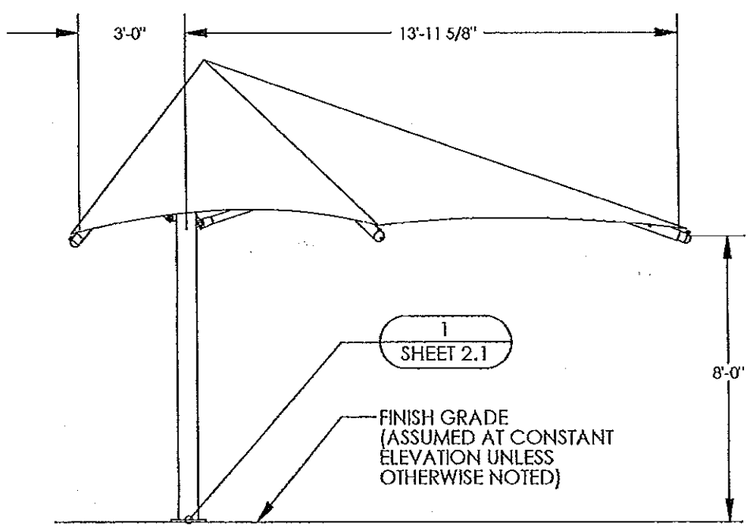

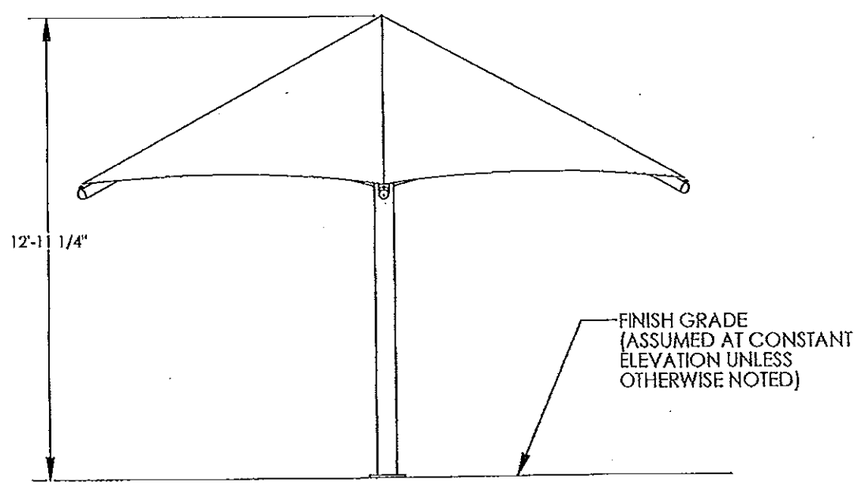

IF THESE DRAWINGS ARE SEALED, THE SEAL APPLIES ONLY TO BUILDING COMPONENTS (AND FOUNDATION DESIGN IF APPLICABLE) DETAILED WITHIN THESE DRAWINGS.

poligon®
(616)399-1963
www.poligon.com
byPORTERCORP

COPYRIGHT 2013
PATENTED OR PATENTS PENDING
PORTERCORP 4240 N. 136th AVE HOLLAND, MI 49424

CREATION DATE:
DRAWN BY:
REV LEVEL: A
SCALE:
JOB NO:
CAD MODEL:

PROJECT:
PROJECT LOCATION:
DRAWING: ARCHITECTURAL F[illegible]IONS

SHEET
1

ANCHOR AND FOOTING LAYOUT NOTES:

1. ANCHORS MUST BE CENTERED IN FOOTINGS
2. FOOTINGS MUST BE TURNED TO ALIGN WITH COLUMN AND TRUSS CENTERLINE.

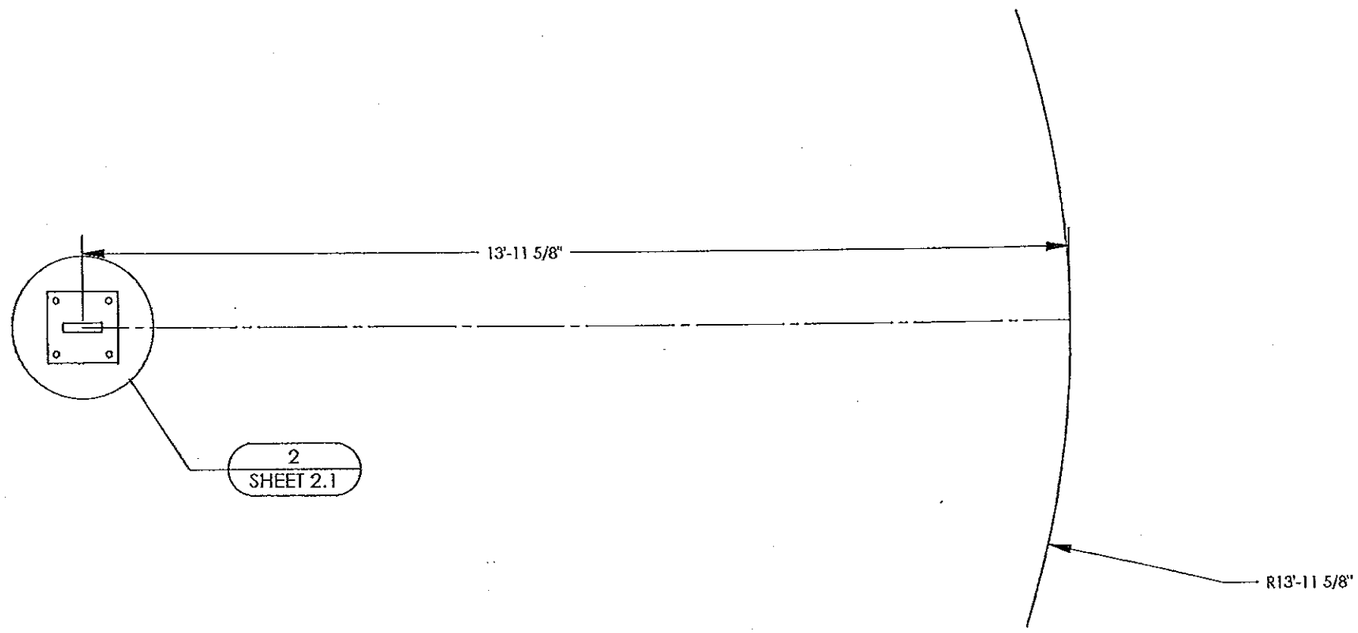

IF THESE DRAWINGS ARE SEALED, THE SEAL APPLIES ONLY TO BUILDING COMPONENTS (AND FOUNDATION DESIGN IF APPLICABLE) DETAILED WITHIN THESE DRAWINGS.

poligon® (616)399-1963 www.poligon.com by PORTERCORP

COPYRIGHT 2013
PATENTED OR PATENTS PENDING
PORTERCORP 4240 N. 136th AVE HOLLAND, MI 49424

PRINT DATE:
SCALE:
DRAWN BY:
REV LEVEL: A
CREATION DATE:
JOB NO:
CAD MODEL:
PROJECT:
PROJECT LOCATION:
DRAWING: ANCHOR LAYOUT
SHEET 2

FOUNDATION NOTES:

1. ALL MATERIALS AND WORKMANSHIP SHALL CONFORM TO THE REQUIREMENTS OF THE BUILDING CODE, AMERICAN CONCRETE INSTITUTE, AND ALL APPLICABLE STATE AND LOCAL ORDINANCES AND REQUIREMENTS.
2. THE CONCRETE DESIGN IS BASED ON THE FOLLOWING PROPERTIES:
   - 28 DAY STRENGTH OF 3000 PSI.
   - SLUMP OF 4" (+/-1").
3. THE FOOTING SHALL BEAR ON COMPETENT UNDISTURBED SOIL OR 95% COMPACTED FILL. IF SIGNS OF ORGANIC MATERIAL, UNCONTROLLED FILL, CLAY OR SILT, HIGH WATER TABLE OR OTHER POSSIBLE DETRIMENTAL CONDITIONS ARE FOUND, INSTALLATION OF THE FOUNDATION MUST BE DISCONTINUED AND A SOILS ENGINEER CONTACTED.
4. THE REINFORCING STEEL SHALL CONFORM TO THE REQUIREMENTS OF ASTM A615, GRADE 60.
5. IF FOOTING DEPTHS SHOWN DO NOT MEET LOCAL FROST REQUIREMENTS, USE THE DRILLED PIER FOOTING OPTION AND EXTEND AS REQUIRED. EXTEND VERTICAL BARS AS REQUIRED AND PROVIDE ADDITIONAL TIES TO MEET SPACING REQUIREMENTS AS SHOWN. IF LOCAL FROST DEPTH REQUIREMENTS ARE NOT MET AND NO DRILLED PIER FOOTING OPTION IS GIVEN, CONTACT POLIGON ENGINEERING. IT IS THE CONTRACTOR'S RESPONSIBILITY TO VERIFY THE LOCAL FROST LINE DEPTH BELOW GRADE PRIOR TO CONSTRUCTION.

THE FOUNDATION DESIGN SHOWN ON THESE DRAWINGS IS NOT SITE SPECIFIC, BUT BASED ON THE PRESUMPTIVE ALLOWABLE FOUNDATION PRESSURES IN CHAPTER 18 OF THE BUILDING CODE (CLASS 5 SOIL). THE BUILDING OFFICIAL IN THE JURISDICTION IN WHICH THIS STRUCTURE IS LOCATED MAY REQUIRE A SITE SPECIFIC GEOTECHNICAL REPORT OR LETTER FROM A QUALIFIED LOCAL PROFESSIONAL ENGINEER ATTESTING TO WHETHER THE ACTUAL SITE CONDITIONS MEET THE ASSUMPTIONS IDENTIFIED ABOVE.THE FOUNDATION DESIGN SHOWN ON THESE DRAWINGS IS NOT SITE

DRILLED PIER FOOTING OPTION

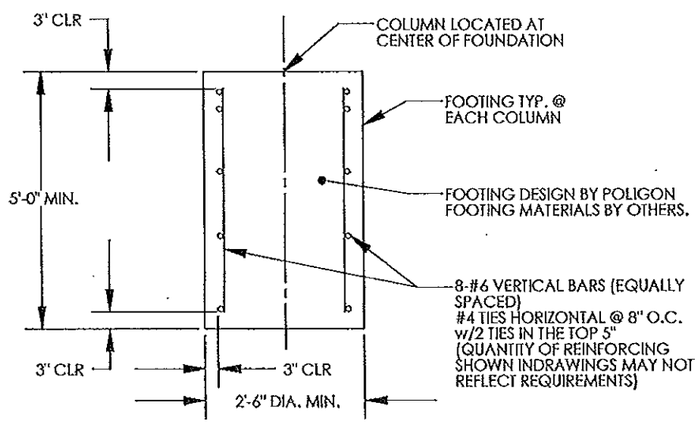

SQUARE FOOTING OPTION

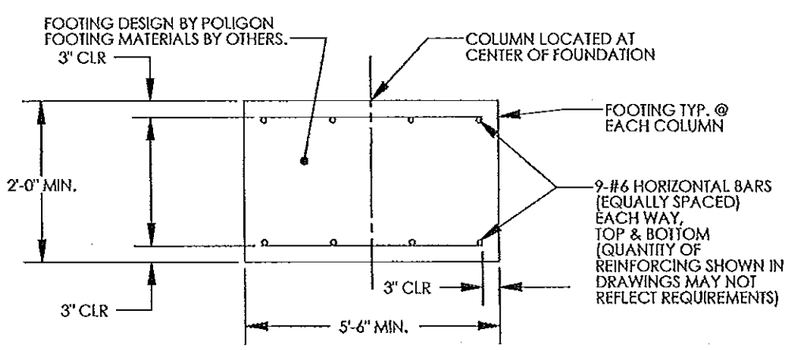

ANCHOR BOLT NOTES - FIXED BASE STRUCTURES (ANCHOR BOLTS LOCATED OUTSIDE COLUMN):

1. ANCHOR BOLTS SHALL BE ASTM F1554 (GRADE 36) MATERIAL UNLESS OTHERWISE NOTED.
2. ANCHOR BOLTS SHALL BE EITHER "HEADED" OR "THREADED WITH NUT" AS DEFINED IN THE AMERICAN INSTITUTE OF STEEL CONSTRUCTION MANUAL (PART 14), 13th EDITION.
3. HOOKED ANCHOR BOLTS ARE NOT ACCEPTABLE.
4. ACCURATE ANCHOR BOLT PLACEMENT IS CRITICAL. TO ENSURE THE ANCHOR BOLT LAYOUT MEETS THE DIMENSIONS REQUIRED ON THE DRAWINGS, SURVEY (OR MEASURE) THE LOCATION OF ALL ANCHOR BOLTS PRIOR TO POURING THE FOOTINGS. AN ADDITIONAL SURVEY (OR MEASUREMENT) SHOULD BE MADE AFTER THE FOOTINGS ARE POURED TO CONFIRM THE ANCHOR BOLTS DID NOT SHIFT DURING THE CONCRETE POUR.
5. POLIGON STRONGLY RECOMMENDS USING ANCHOR BOLT TEMPLATES BECAUSE THEY SIGNIFICANTLY IMPROVE THE ACCURACY OF ANCHOR BOLT PLACEMENT.
6. REFER TO CALCULATIONS FOR MINIMUM CONCRETE EDGE DISTANCES REQUIRED BY THE ANCHOR BOLT DESIGN.
7. ELECTRICAL ACCESS HOLE IS ALWAYS LOCATED IN THE COLUMN BASE PLATE AS SHOWN.
8. NON-SHIINK GROUT FOR BASEPLATES SHALL BE NON-METALLIC, NON-SHRINK GROUT WITH MINIMUM f'c=7000psi.

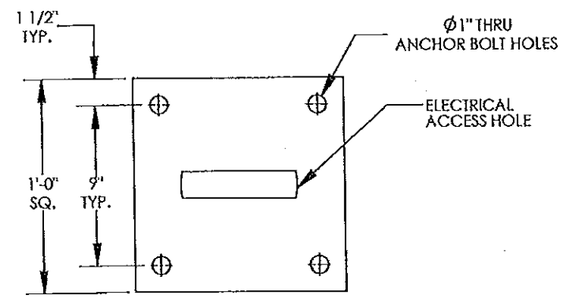

2/2 ANCHOR BOLT PATTERN
BASE PLATE THICKNESS: 3/4"

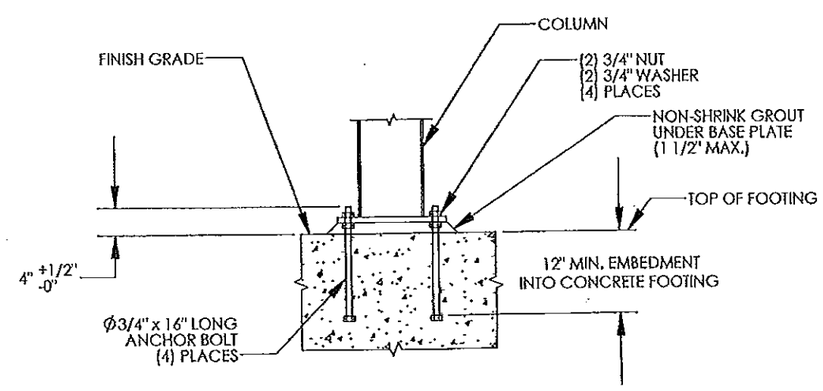

ANCHOR BOLT SUBSTITUTION
THE FOLLOWING EPOXY ANCHORS MAY BE SUBSTITUTED FOR THE CAST IN PLACE ANCHOR BOLTS ABOVE:
-HILTI HIT-HY 150 MAX ADHESIVE w/ Ø3/4" HAS ROD WITH A MINIMUM 12" EMBEDMENT.

IF THESE DRAWINGS ARE SEALED, THE SEAL APPLIES ONLY TO BUILDING COMPONENTS (AND FOUNDATION DESIGN IF APPLICABLE) DETAILED WITHIN THESE DRAWINGS.

poligon® (616)399-1963 www.poligon.com
by PORTERCORP

COPYRIGHT 2013
PATENTED OR PATENTS PENDING
PORTERCORP 4250 N. 136th AVE. HOLLAND, MI 49424

PRINT DATE:
SCALE: 1:1
DRAWN BY:
REV LEVEL: A
CREATION DATE:
JOB NO:
CAD MODEL:
PROJECT:
PROJECT LOCATION:
DRAWING: ANCHOR AND FOOTING DETAILS
SHEET 2.1

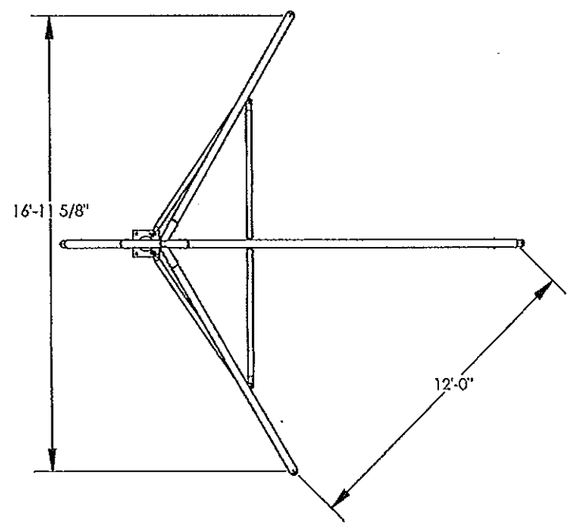

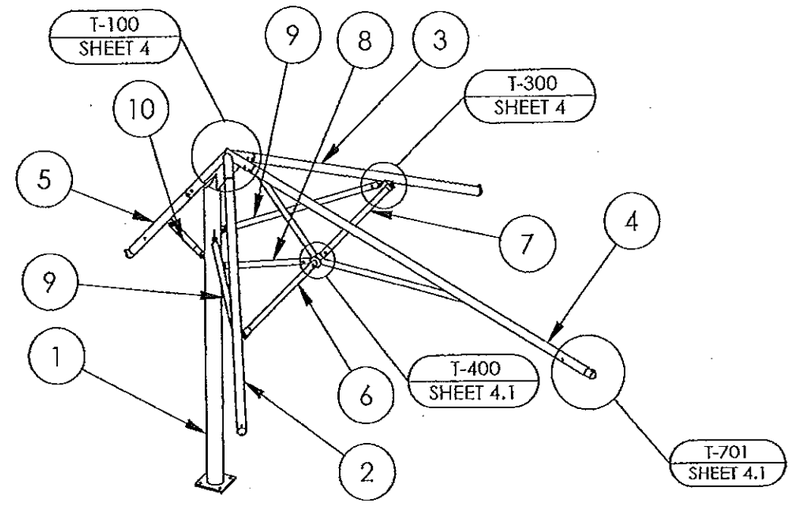

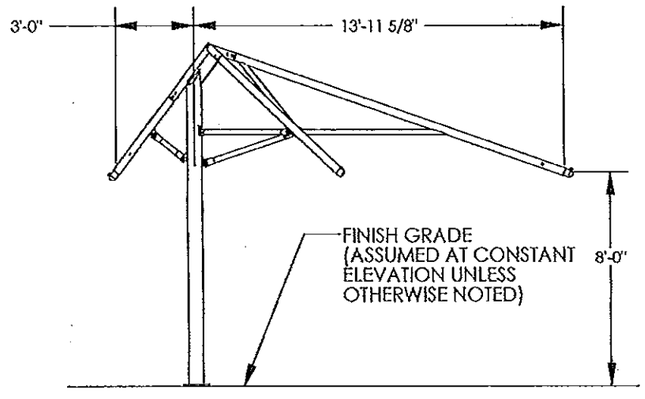

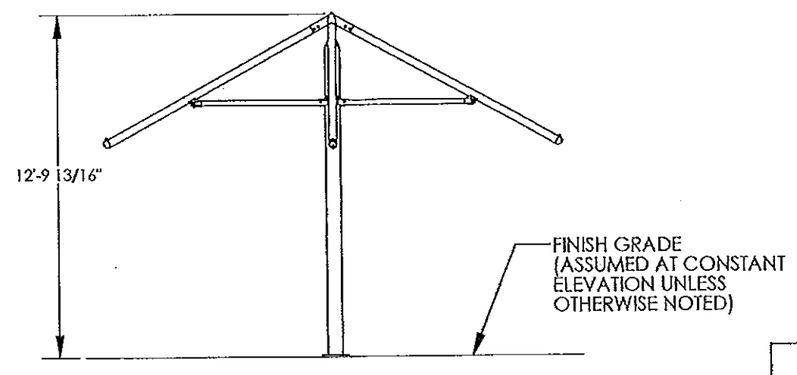

ITEM	FRAME/QTY.	PART NO.	DESCRIPTION	MATERIAL
10	1	-	TRUSS SPRT REAR	HSSR2.375X1/8"
9	2	-	TRUSS SPRT SIDE	HSSR2.375X1/8"
8	1	-	TRUSS SPRT MID	HSSR2.375X1/8"
7	1	-	TRUSS SPRT RH	HSSR2.375X1/8"
6	1	-	TRUSS SPRT LH	HSSR2.375X1/8"
5	1	-	TRUSS ASM REAR	HSSR3.5X1/8"
4	1	-	TRUSS ASM MID	HSSR3.5X1/8"
3	1	-	TRUSS ASM RH	HSSR3.5X1/8"
2	1	-	TRUSS ASM LH	HSSR3.5X1/8"
1	1	-	COLUMN ASM	SP40X6

IF THESE DRAWINGS ARE SEALED, THE SEAL APPLIES ONLY TO BUILDING COMPONENTS (AND FOUNDATION DESIGN IF APPLICABLE) DETAILED WITHIN THESE DRAWINGS.

poligon®
(616)399-1963
www.poligon.com
byPORTERCORP

COPYRIGHT 2013
PATENTED OR PATENTS PENDING
PORTERCORP 4240 N. 136th AVE HOLLAND, MI 49424

DRAWN BY:
REV LEVEL: A
SCALE: 1:56
CREATION DATE:
JOB NO:
CAD MODEL:
PROJECT:
PROJECT LOCATION:
DRAWING: STRUCTURAL FRAMING PLAN
SHEET 3

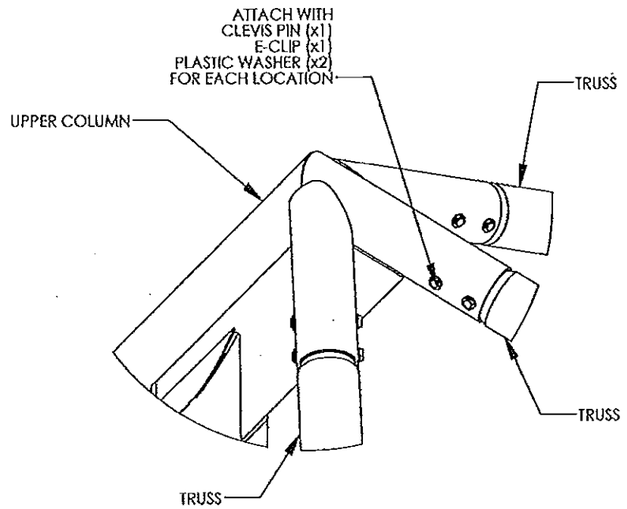

TRUSS CONNECTION | T-100

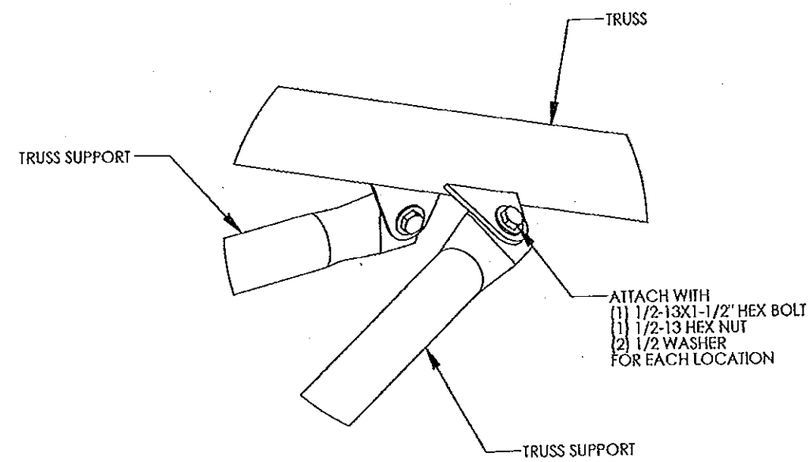

TRUSS SUPPORT CONNECTION | T-300

TURN-OF-NUT PRETENSIONING METHOD:

THESE STEPS ILLUSTRATE THE REQUIREMENTS OUTLINED IN THE AISC SPECIFICATION. THE ROTATION INDICATED IS ACCURATE FOR MOST BOLT DIAMETERS AND LENGTHS BUT IT IS THE RESPONSIBILITY OF THE INSTALLER TO MEET AISC REQUIREMENTS.

STEP ONE:

AFTER SNUG TIGHT, MATCH MARK PLATE

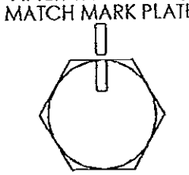

STEP TWO:

THEN TURN BOLT/NUT PAST SNUG TIGHT 1/3 TURN

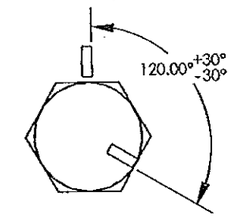

CONNECTION NOTES:

1. ALL HIGH STRENGTH BOLTS ARE A325 BOLTS AND TO BE INSTALLED BY THE "TURN -OF-NUT" PRETENSIONING METHOD AS SPECIFIED IN THE 13TH EDITION OF THE AISC "SPECIFICATION FOR STRUCTURAL JOINTS USING ASTM A325 OR A490 BOLTS", SECTION 8 (SEE ILLUSTRATION). A325 BOLTS MAY BE INSTALLED WITHOUT WASHERS WHEN TIGHTENED BY THE "TURN-OF-NUT" PRETENSIONING METHOD. IT IS THE RESPONSIBILITY OF THE ERECTOR TO INSURE PROPER TIGHTNESS. THIS METHOD IS ONLY REQUIRED ON 5/8" DIAMETER AND LARGER BOLTS. ANCHOR BOLTS NEED NOT BE TIGHTENED PAST SNUG TIGHT.
2. LOCAL JURISDICTIONS MAY REQUIRE AN INSPECTOR TO BE PRESENT TO WITNESS HARDWARE INSTALLATION AND INDEPENDENT TESTING. INSPECTION REQUIREMENTS SHOULD BE VERIFIED PRIOR TO STEEL ERECTION.
3. ERECTION OF THE FRAMING MEMBERS WILL REQUIRE THE MAIN COLUMNS TO BE PLUMB SQUARE AND TIGHTENED TO THE TRUSSES AND TENSION MEMBERS BEFORE INSTALLING THE PURLINS. PURLINS, IF REQUIRED, MUST BE PARALLEL TO THE EAVE BEAMS AND TENSION MEMBERS.
4. TOUCH-UP PAINT MUST BE APPLIED TO ALL EXPOSED BOLTS & NUTS. PERIODIC TOUCH-UP AT THESE BOLTED CONNECTIONS IS REQUIRED.
5. UNLESS THE BUILDING HAS A FACTORY APPLIED POWDERCOAT, E-COAT OR GALVANIZING, THE FRAME WILL BE PRIME PAINTED AND WILL BE REQUIRED TO BE FINISH PAINTED IN THE FIELD WITH ALL PAINT, MATERIALS AND LABOR NOT BY POLIGON (PORTERCORP). REFER TO FINAL SALES ORDER.
6. PRIOR TO THE ERECTION OF SHELTER COMPONENTS, IT IS RECOMMENDED TO CHASE AND TAP STRUCTURAL HARDWARE. EVEN THOUGH POLIGON MAKES EVERY EFFORT TO PROTECT THE HARDWARE DURING THE PROCESS OF PRODUCTION, FINISH, AND SHIPPING, THE ON-SITE CHASING AND TAPPING OF THREADS IS ALWAYS GOOD POLICY.
7. TO PREVENT RUST STAINING OF FINISH, ALL METAL SHAVINGS MUST BE REMOVED AFTER INSTALLATION. ENSURE NO SHAVING ARE TRAPPED BETWEEN MEMBER SURFACES.

IF THESE DRAWINGS ARE SEALED, THE SEAL APPLIES ONLY TO BUILDING COMPONENTS (AND FOUNDATION DESIGN IF APPLICABLE) DETAILED WITHIN THESE DRAWINGS.

(616)399-1963
www.poligon.com
poligon® by PORTERCORP

COPYRIGHT 2013
PATENTED OR PATENTS PENDING
PORTERCORP 2240 W. 136th AVE. HOLLAND, MI. 49424

PRINT DATE:
SCALE: 1:4
DRAWN BY:
REV LEVEL: A
CREATION DATE:
JOB NO:
CAD MODEL:
PROJECT:
PROJECT LOCATION:
DRAWING: FRAME CONNECTION DETAILS
SHEET 4

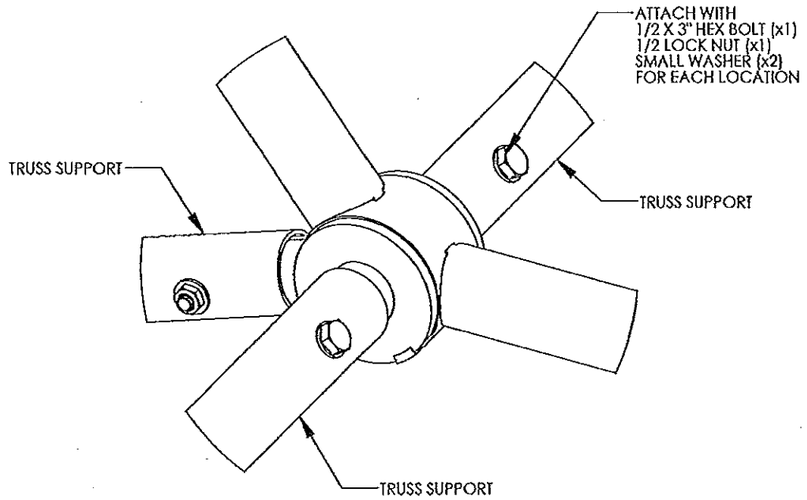

TRUSS SUPPORT HUB CONNECTION	T-400

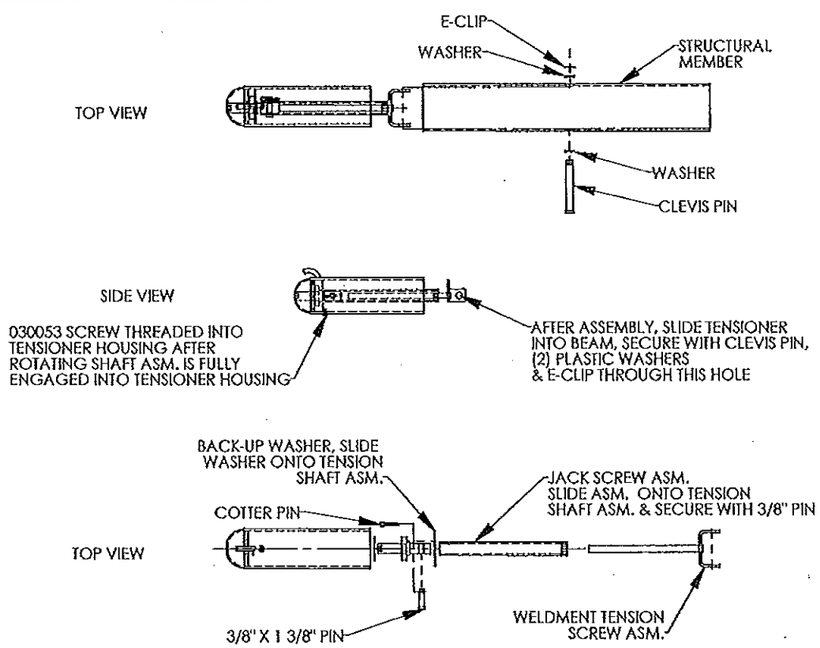

ROUND TENSIONER ASSEMBLY	T-701

IF THESE DRAWINGS ARE SEALED, THE SEAL APPLIES ONLY TO BUILDING COMPONENTS (AND FOUNDATION DESIGN IF APPLICABLE) DETAILED WITHIN THESE DRAWINGS.

poligon® (616)399-1963
www.poligon.com
by PORTERCORP

COPYRIGHT 2013
PATENTED OR PATENTS PENDING
PORTERCORP 4240 N. 136th AVE. HOLLAND, MI 49424

PROJECT:
PROJECT LOCATION:
DRAWING: FRAME CONNECTION DETAILS
CREATION DATE: 3
JOB NO:
CAD MODEL:
DRAWN:
REV LEVEL: A
PRINT DATE:
SCALE: 1:4
SHEET 4.1

FABRIC SPECIFICATIONS

1. HEAVY DUTY PROFESSIONAL GRADE ARCHITECTURAL SHADE FABRIC 100% LEAD AND PHTHALATE FREE MADE FROM UV STABILIZED HDPE MONOFILAMENT AND TAPE YARNS
2. SPECIALIZED LOCK STITCH KNIT FOR MORE MOVEMENT AND BETTER CHANNELING OF COOLING BREEZEWAYS
3. CONSTRUCTED TO BLOCK UP TO 98.8% OF HARMFUL UV SUN RAYS·
4. HEAT SET FOR EASE OF FABRICATION AND TO LIMIT SHRINKAGE
5. RECYCLABLE, TEAR RESISTANT AND WILL NOT CRACK, ROT OR FADE
6. (10) YEAR MANUFACTURERS LIMITED WARRANTY AGAINST UV DEGRADATION
7. ALL SEAMS AND HEMS ARE DOUBLE ROW LOCK STITCHED, SEWN TOGETHER USING GORE® TENARA® THREAD WHICH DOES NOT DETERIORATE OR BLEACH
8. (5) YEAR MANUFACTURERS LIMITED WARRANTY AGAINST UV DEGRADATION
9. ALL SEAMS AND HEMS ARE DOUBLE ROW LOCK STITCHED SEWN TOGETHER USING GORE® TENARA® THREAD WHICH DOES NOT DETERIORATE FROM EXPOSURE TO THE ELEMENTS OR UV RADIATION.
10. ALSO AVAILABLE WITH FLAME RETARDANT.

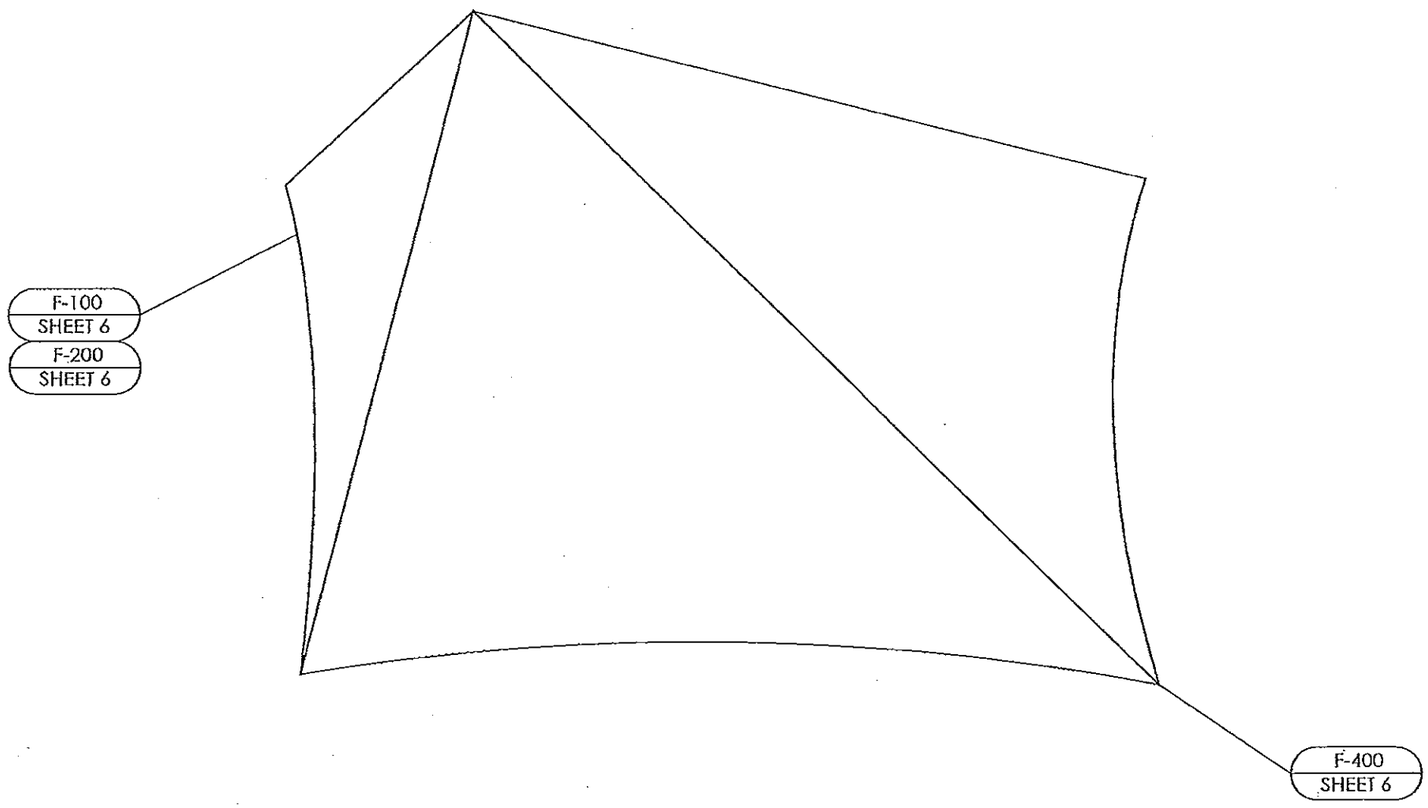

ITEM	FABRIC TOP/QTY.	PART NO.	DESCRIPTION	MATERIAL	CABLE LENGTH
1	1	-	FABRIC TOP	SHADE	-

IF THESE DRAWINGS ARE SEALED, THE SEAL APPLIES ONLY TO BUILDING COMPONENTS (AND FOUNDATION DESIGN IF APPLICABLE) DETAILED WITHIN THESE DRAWINGS.

(616)399-1963
www.poligon.com
poligon®
by PORTERCORP

COPYRIGHT 2013
PATENTED OR PATENTS PENDING
PORTERCORP 4240 N. 134th AVE HOLLAND, MI 49424

PRINT RATIO:
SCALE: 1:4
DRAWN BY:
REV LEVEL: A
CREATION DATE:
JOB NO:
CAD MODEL:
PROJECT:
PROJECT LOCATION:
DRAWING: FABRIC LAYOUT
SHEET 5

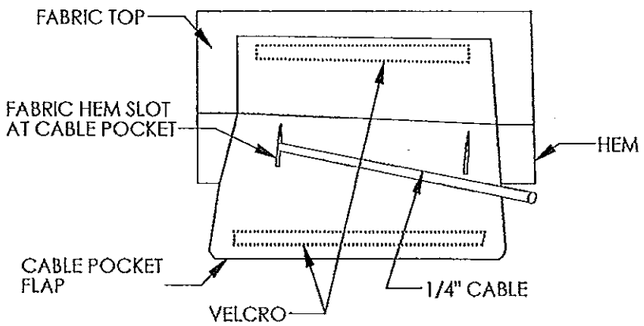

- WITH FABRIC TOP STILL ON THE GROUND, INSTALL STAINLESS STEEL CABLE INTO THE FABRIC HEM UNDER CABLE POCKET FLAP.
- PASS THE CABLE THROUGH THE SEWN HEM AROUND THE TOP TO NEXT SLOT.

FABRIC CABLE INSTALLATION | F-100

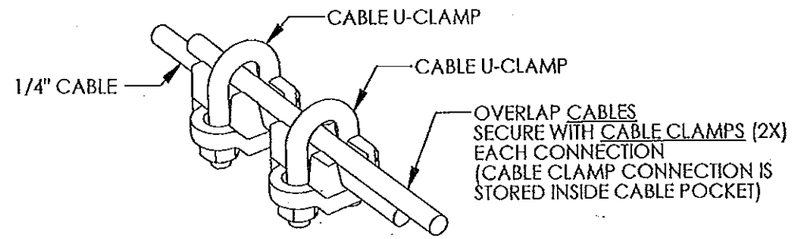

- WITH FABRIC TOP ON STRUCTURE, ASSEMBLE CABLE AND CLAMPS AS DESCRIBED ABOVE.
- HAND PULL THE CABLE TO REMOVE ANY SLACK.
- DO NOT OVERTIGHTEN THE U-CLAMPS AROUND THE CABLE INITIALLY, TO ALLOW PROPER TENSIONING.
- IT MAY BE NECESSARY TO LOOSEN THE CABLE U-CLAMPS TO ALLOW THE TENSIONERS TO REMOVE WRINKLES.
- BEGIN TELESCOPING TENSIONERS, ENSURING UNIFORM EXTENSION.
- DO NOT EXTEND TENSIONER PAST THE MAXIMUM STROKE OF 6".
- NOTE: THE TOP IS SUFFICIENTLY TAUT WHEN WRINKLES IN THE FABRIC HAVE BEEN REMOVED.
- TIGHTEN U-CLAMPS.

FABRIC CABLE CONNECTION | F-200

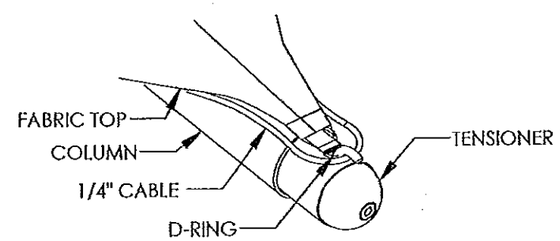

- THE TENSIONERS ON THE STRUCTURE ARE TO BE IN THEIR FULLY RETRACTED POSITION.
- CARE SHOULD BE TAKEN AS NOT TO SNAG FABRIC TOP.
- HOOK D-RINGS ONTO THE HOOKS OF THE TENSIONERS.
- LOOP THE CABLE AROUND HOOKS OF THE TENSIONERS.
- DO NOT KINK OR CREASE CABLE.
- REMOVAL OF THE FABRIC TOP IS A REVERSE PROCESS OF THE INITIAL INSTALLATION.

FABRIC CONNECTION @ TENSIONER | F-400

IF THESE DRAWINGS ARE SEALED, THE SEAL APPLIES ONLY TO BUILDING COMPONENTS (AND FOUNDATION DESIGN IF APPLICABLE) DETAILED WITHIN THESE DRAWINGS.

poligon® (616)399-1963 www.poligon.com
byPORTERCORP
COPYRIGHT 2013
PATENTED OR PATENTS PENDING
PORTERCORP 4240 N. 136th AVE. HOLLAND, MI 49424

PRINT DATE:
SCALE: 1:4
DRAWN BY:
REV LEVEL: A
CREATION DATE:
JOB NO:
CAD MODE:
PROJECT:
PROJECT LOCATION:
DRAWING: FABRIC DETAILS
SHEET 6

This Plan Must Be Approved By Landscape Structures Inc.

QTY. POST/ARCH LENGTHS

2	A	190"Steel Post For Roof DB
2	B	190"Alum Post For Roof DB
1	C	156"Steel Post DB
2	D	140"Alum Post DB
1	E	140"Steel Post DB
2	F	124"Alum Post DB
1	G	116"Alum Post DB

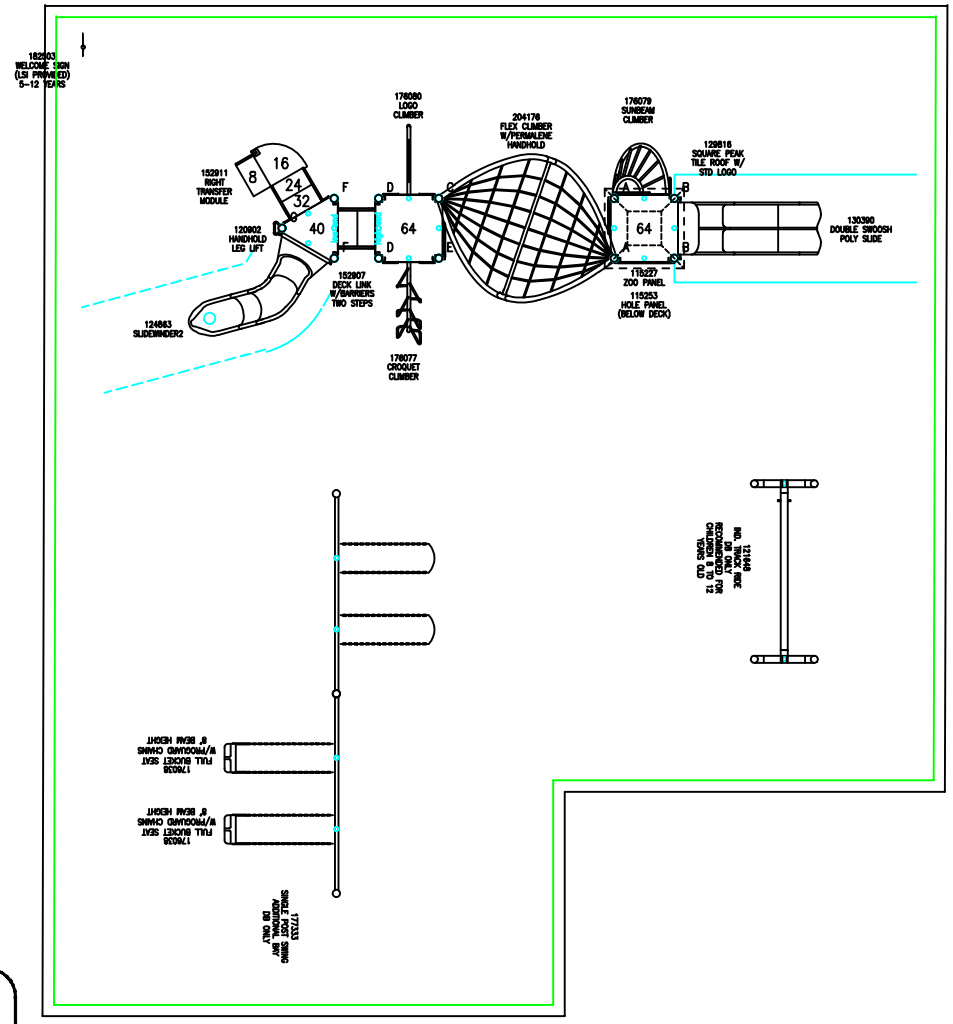

TOTAL ELEVATED PLAY COMPONENTS	6				
TOTAL ELEVATED COMPONENTS ACCESSIBLE BY RAMP	0	REQUIRED	0		
TOTAL ELEVATED COMPONENTS ACCESSIBLE BY TRANSFER	4	REQUIRED	3		
TOTAL ACCESSIBLE GROUND LEVEL COMPONENTS SHOWN	5	REQUIRED	2		
TOTAL DIFFERENT TYPES OF GROUND LEVEL COMPONENTS	4	REQUIRED	4		

landscape structures

IPEMA CERTIFIED ASTM F1487

The play components identified on this plan are IPEMA certified. (Unless model number is preceded with *) The use and layout of these components conform to the requirements of ASTM F1487. To verify product certification, visit www.ipema.org

THIS PLAY AREA & PLAY EQUIPMENT IS DESIGNED FOR AGES 5-12 YEARS UNLESS OTHERWISE NOTED ON PLAN.

IT IS THE MANUFACTURERS OPINION THAT THIS PLAY AREA DOES CONFORM TO THE A.D.A. ACCESSIBILITY STANDARDS, ASSUMING AN ACCESSIBLE PROTECTIVE SURFACING IS PROVIDED, AS INDICATED, OR WITHIN THE ENTIRE USE ZONE.

THIS CONCEPTUAL PLAN WAS BASED ON INFORMATION AVAILABLE TO US. PRIOR TO CONSTRUCTION, DETAILED SITE INFORMATION INCLUDING SITE DIMENSIONS, TOPOGRAPHY, EXISTING UTILITIES, SOIL CONDITIONS, AND DRAINAGE SOLUTIONS SHOULD BE OBTAINED, EVALUATED, & UTILIZED IN THE FINAL DESIGN. PLEASE VERIFY ALL DIMENSIONS OF PLAY AREA, SIZE, ORIENTATION, AND LOCATION OF ALL EXISTING UTILITIES, EQUIPMENT, AND SITE FURNISHINGS PRIOR TO ORDERING. SLIDES SHOULD NOT FACE THE HOT AFTERNOON SUN.

CHOOSE A PROTECTIVE SURFACING MATERIAL THAT HAS A CRITICAL HEIGHT VALUE TO MEET THE MAXIMUM FALL HEIGHT FOR THE EQUIPMENT (REF. ASTM F1487 STANDARD CONSUMER SAFETY PERFORMANCE SPECIFICATION FOR PLAYGROUND EQUIPMENT FOR PUBLIC USE, SECTION 8 CURRENT REVISION). THE SUBSURFACE MUST BE WELL DRAINED. IF THE SOIL DOES NOT DRAIN NATURALLY IT MUST BE TILED OR SLOPED 1/8" TO 1/4" PER FOOT TO A STORM SEWER OR A "FRENCH DRAIN".

ACCESSIBLE/PROTECTIVE
LOOSE FILL MATERIAL
(ENGINEERED WOOD FIBER SUGGESTED)

DESIGNED BY:
GPC

COPYRIGHT: 2/9/2016
LANDSCAPE STRUCTURES, INC.
601 7th STREET SOUTH – P.O. BOX 188
DELANO, MINNESOTA 55328
PH: 1-800-328-0038 FAX: 1-763-972-6091

Date	Previous Drawing #	Initials

SNAP TITLE HERE

PlayBooster®
(5-12 years)

Hill's Lake Park

Waconia, MN

Flagship
Recreation
Paul Satterlund

SYSTEM TYPE:
Playbooster

DRAWING #:
91488-1-1

Quote

Presented By:
Flagship Recreation
4940 W. 35th Street
St. Louis Park MN
info@flagshipplay.com
(o) 763-550-7860
(f) 763-550-7864

Project Name: **Hill's Park Revision**
Project Address: 201 South Vine Street
Waconia, MN 55387
Contact: David Wabbe
City of Waconia
Notes
Track Ride freestanding

Date: **4/4/2016**
Drawing #: **LSI 1-**
Proposal #:
Lead Time:

Q	Item	Description	Unit Cost	Extended
1	LSI	LSI Playground Equipment	30441	$30,441.00
1	Install	Installation of Equipment + Concrete	5841	$5,841.00
1	Surfacing	12" Engineered Wood Fiber Installed	3953	$3,953.00
1	Fabric	Fabric Installed	1155	$1,155.00
1	Site	Mobilization, Restoration, Site Mgt	190	$190.00

SIGNATURE BELOW ACCEPTING THIS PROPOSAL WILL CONSTITUTE A PURCHASE ORDER ONLY UPON APPROVAL BY FLAGSHIP RECREATION, LLC CUSTOMER RECEIPT OF AN ORDER ACKNOWLEDGEMENT CONSTITUTES SUCH APPROVAL.

Shipping	$ 440.00
Subtotal	$42,020.00
Applicable Tax	Provide Exempt Cert.
Installation	Included Above
Total	**$ 42,020.00**

4/4/2016
Date
Signature

Print Name

Prices held if product ships before:
12/31/2015

This Plan Must Be Approved By Landscape Structures Inc.

QTY. POST/ARCH LENGTHS

2	A	190"Alum Post For Roof DB
2	B	190"Steel Post For Roof DB
1	C	156"Steel Post DB
1	D	140"Steel Post DB
2	E	140"Alum Post DB
4	F	132"Alum Post DB
2	G	124"Alum Post DB
2	H	116"Alum Post DB
2	I	100"Alum Post DB
2	J	92"Alum Post DB

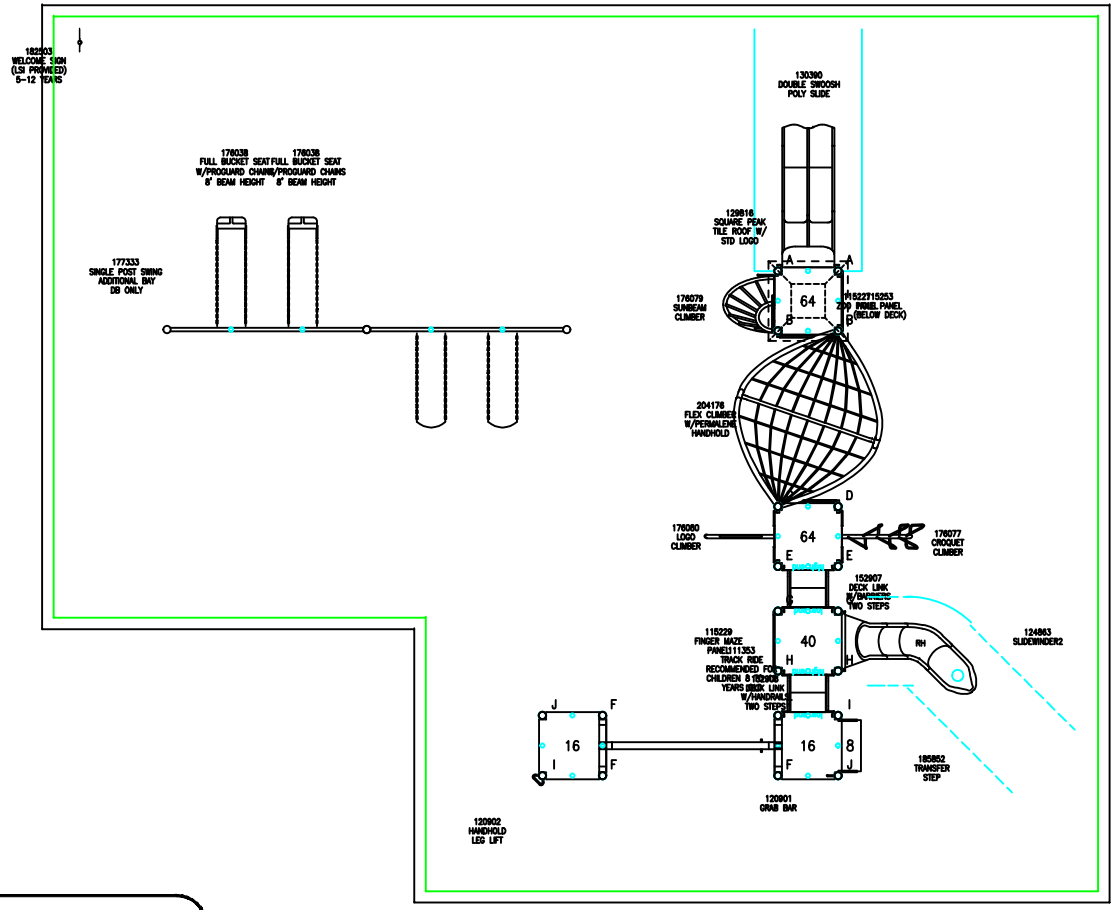

TOTAL ELEVATED PLAY COMPONENTS	6			
TOTAL ELEVATED COMPONENTS ACCESSIBLE BY RAMP	0	REQUIRED	0	
TOTAL ELEVATED COMPONENTS ACCESSIBLE BY TRANSFER	4	REQUIRED	3	
TOTAL ACCESSIBLE GROUND LEVEL COMPONENTS SHOWN	5	REQUIRED	2	
TOTAL DIFFERENT TYPES OF GROUND LEVEL COMPONENTS	4	REQUIRED	4	

landscape structures

IPEMA CERTIFIED ASTM F1487

The play components identified on this plan are IPEMA certified. (Unless model number is preceded with *) The use and layout of these components conform to the requirements of ASTM F1487. To verify product certification, visit www.ipema.org

THIS PLAY AREA & PLAY EQUIPMENT IS DESIGNED FOR AGES 5-12 YEARS UNLESS OTHERWISE NOTED ON PLAN.

IT IS THE MANUFACTURERS OPINION THAT THIS PLAY AREA DOES CONFORM TO THE A.D.A. ACCESSIBILITY STANDARDS, ASSUMING AN ACCESSIBLE PROTECTIVE SURFACING IS PROVIDED, AS INDICATED, OR WITHIN THE ENTIRE USE ZONE.

THIS CONCEPTUAL PLAN WAS BASED ON INFORMATION AVAILABLE TO US. PRIOR TO CONSTRUCTION, DETAILED SITE INFORMATION INCLUDING SITE DIMENSIONS, TOPOGRAPHY, EXISTING UTILITIES, SOIL CONDITIONS, AND DRAINAGE SOLUTIONS SHOULD BE OBTAINED, EVALUATED, & UTILIZED IN THE FINAL DESIGN. PLEASE VERIFY ALL DIMENSIONS OF PLAY AREA, SIZE, ORIENTATION, AND LOCATION OF ALL EXISTING UTILITIES, EQUIPMENT, AND SITE FURNISHINGS PRIOR TO ORDERING. SLIDES SHOULD NOT FACE THE HOT AFTERNOON SUN.

CHOOSE A PROTECTIVE SURFACING MATERIAL THAT HAS A CRITICAL HEIGHT VALUE TO MEET THE MAXIMUM FALL HEIGHT FOR THE EQUIPMENT (REF. ASTM F1487 STANDARD CONSUMER SAFETY PERFORMANCE SPECIFICATION FOR PLAYGROUND EQUIPMENT FOR PUBLIC USE, SECTION 8 CURRENT REVISION). THE SUBSURFACE MUST BE WELL DRAINED. IF THE SOIL DOES NOT DRAIN NATURALLY IT MUST BE TILED OR SLOPED 1/8" TO 1/4" PER FOOT TO A STORM SEWER OR A "FRENCH DRAIN".

ACCESSIBLE/PROTECTIVE
LOOSE FILL MATERIAL
(ENGINEERED WOOD FIBER SUGGESTED)

DESIGNED BY:
GPC

COPYRIGHT: 2/9/2016
LANDSCAPE STRUCTURES, INC.
601 7th STREET SOUTH – P.O. BOX 188
DELANO, MINNESOTA 55328
PH: 1-800-328-0035 FAX: 1-763-972-6091

Date	Previous Drawing #	Initials

SNAP TITLE HERE

PlayBooster®
(5-12 years)

Hill's Lake Park

Waconia, MN

Flagship
Recreation
Paul Satterlund

SYSTEM TYPE:
Playbooster

DRAWING #:
91488-1-1

Quote

Presented By:
Flagship Recreation
4940 W. 35th Street
St. Louis Park MN
info@flagshipplay.com
(o) 763-550-7860
(f) 763-550-7864

Project Name: **Hill's Park Revision**
Project Address: 201 South Vine Street
Waconia, MN 55387
Contact: David Wabbe
City of Waconia
Notes
Track Ride Attached

Date: **4/4/2016**
Drawing #: **LSI 1-**
Proposal #:
Lead Time:

Q	Item	Description	Unit Cost	Extended
1	LSI	LSI Playground Equipment	33919	$33,919.00
1	Install	Installation of Equipment + Concrete	6566	$6,566.00
1	Surfacing	12" Engineered Wood Fiber Installed	3836	$3,836.00
1	Fabric	Fabric Installed	1156	$1,156.00
1	Site	Mobilization, Restoration, Site Mgt	190	$190.00

SIGNATURE BELOW ACCEPTING THIS PROPOSAL WILL CONSTITUTE A PURCHASE ORDER ONLY UPON APPROVAL BY FLAGSHIP RECREATION, LLC CUSTOMER RECEIPT OF AN ORDER ACKNOWLEDGEMENT CONSTITUTES SUCH APPROVAL.

Shipping	$ 440.00
Subtotal	$46,107.00
Applicable Tax	Provide Exempt Cert.
Installation	Included Above
Total	**$ 46,107.00**

4/4/2016
Date
Signature

Print Name

Prices held if product ships before:
12/31/2015